Laboratory for Fire Safety

Classification of the fire resistance in accordance with EN 13501-2:2023 of AGC Pyrobel 25 P6B in a Glued Laminated Timber Hévéa rubberwood frame

Classification report

Report number YB 3337-1E-RA-002 dated 15 October 2026

YB 3337-1E-RA-002 /E5DBA016/ JORISVD

Laboratory for Fire Safety

Classification of the fire resistance in accordance with EN 13501-2:2023 of AGC Pyrobel 25 P6B in a Glued Laminated Timber Hévéa rubberwood frame

Classification report

Client:	AGC Glass Europe Sa Seneffe Avenue Jean Monnet 4 1348 Louvain-La-Neuve Belgium
Issued by:	Peutz bv Lindenlaan 41 NL-6584 AC Molenhoek
Notified Body:	NB 2264
Product:	**AGC Pyrobel 25 P6B in a Glued Laminated Timber Hévéa rubberwood frame**
Report Number:	YB 3337-1E-RA-002
Date:	15 October 2026
Reference:	JvdV/HDu/ /YB 3337-1E-RA-002
Representative:	ir. J van der Vleuten
Author:	H. Duinkerken BSc 085 8228453 h.duinkerken@peutz.nl

TESTING RvA L 334

egolf

This report consists of 21 pages and an Appendix of 13 pages and may only be used and reproduced in its entirety.

Table of contents

Revision history 4

1 Introduction 5

2 Details of the classified system 6

2.1 General 6
2.2 Product description 6

3 Test data in support of the classification 9

3.1 Results 9
3.1.1 Report Y 3337-3E-RA-001 9
3.1.2 Extended Application report YA 3337-2E-RA-002 10

4 Classification 12

4.1 Reference of the classification 12
4.2 Classification 12

5 Field of application 13

5.1 General 13
5.2 Field of application and conditions 13
5.3 Asymmetrical design 13
5.4 Field of application without overrun time 14
5.4.1 Glazed elements (Glass including the Frame) 14
5.4.2 Non-glazed element 14
5.4.3 Self adhesive decorative film 14
5.4.4 Exchange of the fire-resistant glass 15
5.4.5 Glass shapes 15
5.4.6 Glazing system (see figure 16 of EN 1364-1) 16
5.4.7 Bead surface coverings. 17
5.4.8 Framing system (see figure 16 of EN 1364-1) 17
5.4.9 Frame surface coverings 18
5.4.10 Supporting constructions 18
5.5 Field of application requiring overrun time 19
5.5.1 Dimensions of the glazed element 19
5.5.2 Dimensions and area of individual rectangular glass panes 19
5.5.3 Dimensions and area of individual rectangular opaque panels 20

6 Additional Statement 21

Revision history

In the table below, the already issued versions of this document are shown. A brief description of the modifications is made.

Revision number	Date [dd-mm-yyyy]	Document status	Modified sections [Chapter/ paragraph]	Description of the modifications
N.a.	01-07-2026	Draft	N.a.	N.a.
001	15-10-2026	Draft	3.1.2	Added additional test evidence
			4.2	Changed conditions panels without intumescent
			5.4.3	Added conditions for alternative panels
			5.5.3	Added section for dimensions alternative panels
002	18-10-2026	Final	1	Renaming Pyrobel 25 P6B and Pyrobel 25
			2	Added product family Pyrobel 25
			3.1.1	Added requested extensions
			5	Added all relevant clauses from EN 15254-4

1 Introduction

This classification report defines the fire resistance classification which is assigned to Pyrobel 25 P6B in a Glued Laminated Timber (GLT) Hévéa rubberwood frame, heated according to the standard fire curve, all this in accordance with the procedures described in EN 13501-2:2023, further referenced as EN 13501-2.

TESTEN
RvA L 334

For performing measurements, the Laboratory for Fire Safety of Peutz bv is recognized by the Dutch Accreditation Body RvA..

The RvA is member of the **EA MLA** (**E**uropean **A**ccreditation Organisation **M**ulti**L**ateral **A**greement). www.european-accreditation.org

EA: "Certificates and reports issued by bodies accreditatie by MLA and MRA members are considered to have the same degree of credibility, and are accepted in MLA and MRA countries".

2 Details of the classified system

2.1 General

The system, Pyrobel 25 P6B in a GLT Hévéa rubberwood frame, is defined as a non-loadbearing (glazed) partition as meant in EN 13501-2 Chapter 7.5.2.
The wall has an asymmetrical construction, due to the Pyrobel 25 P6B.
The glass product, Pyrobel 25 P6B is part of the glass product family Pyrobel 25.

2.2 Product description

The system, Pyrobel 25 P6B in a GLT Hévéa rubberwood frame, is fully described in the primary test evidence **Y 2635-3-RA-002**. Tables t 2.1 till t 2.4 show the most relevant characteristics and materials used as primary evidence. For a complete overview of the construction, please refer to the test report(s) as listed in Table t 3.1.
See also Appendix 1 for drawings of the product family and Figure f 2.1.

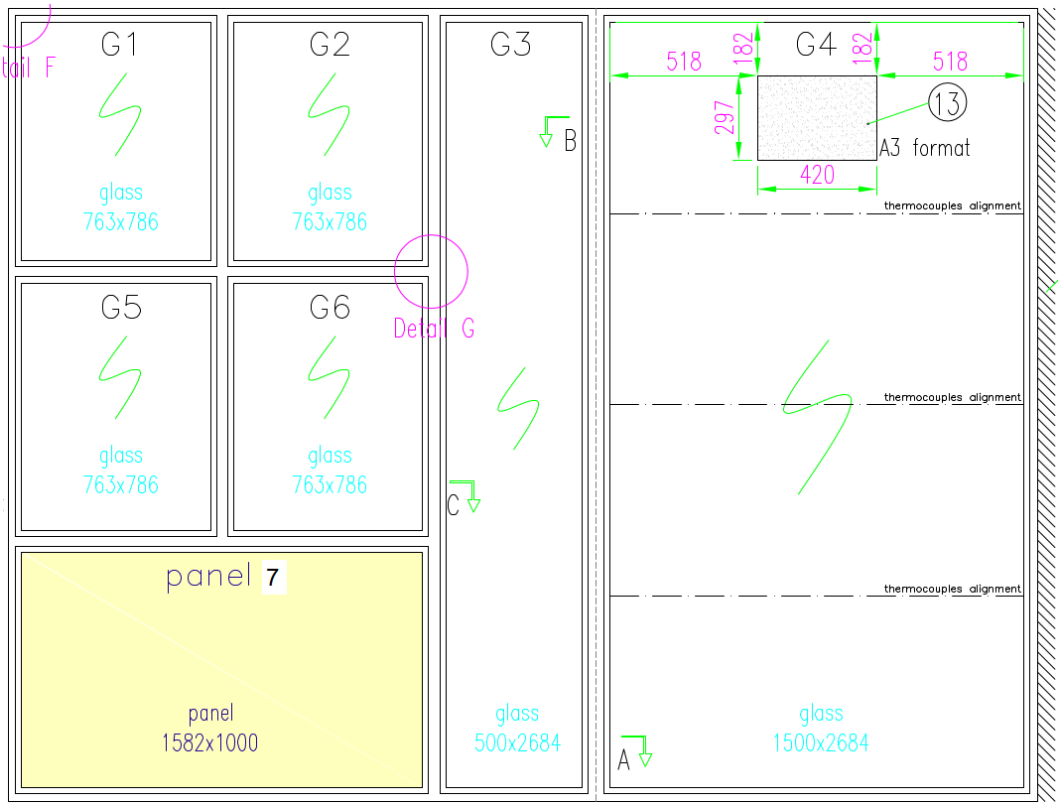

f 2.1 Overview construction with numbering for observations

t 2.1 Most important characteristics frame

Parameter	Description
Frame material	Glued Laminated Timber Hévéa rubberwood 422 kg/m³ MW
Outer dimensions	Two elements: 2214 x 2760 mm (w x h) 1576 x 2760 mm (w x h)
Frame dimensions	Perimeter frame: 102.5 x 33 mm (d x h) Mullions and transoms: 102.5 x 46 mm (d x h) Coupled mullion: 102.5 x 33 mm (d x h)
Perimeter Gap	22 mm (filled with Promat Dalfratherm)

t 2.2 Frame infill materials

Material description	Dimensions / specifications
Glass	Structure: Pyrobel 25 P6B Exposed side: Pyrobel side
Dimensions *Numbering panes and panel see f 2.1*	Frame left: 2214 x 2760 mm (w x h): - Glass panes G1, G2, G5, G6: 763 x 786 mm (w x h) - Glass pane G3: 500 x 2684 mm (w x h) - Panel: 1582 x 1000 mm (w x h) Frame right: 1576 x 2214 mm (w x h) - Glass pane G4: 1500 x 2684 (w x h)
Panel	Promatect H Thickness: 30 mm (2 x 15 mm)

t 2.3 Fixing materials

Material description	Dimensions / specifications
Glazing sealant	Dow Dowsil 700 Firestop
Glazing tape	Ceramic paper, Superwool X607 20 x 5 mm
Glazing beads (for glass and panel)	Glued Laminated Timber Hévéa rubberwood 422 kg/m³ MW 30 x 27 mm (d x h) bevelled to 20 mm (h)
Screws glazing beads	Steel screw pfs ø 4.5 x 60 mm, angle appr. 77° 60 mm from corners, c.t.c. 200 mm
Anchors fixing frame to supporting construction	Hilti HRD-C anchor ø 7 x 100 mm With frame plug ø 10 x 100 mm 200 mm from corners, c.t.c. 450 mm
Anchors fixing frame to test frame	Screws ø 6 x 112 mm 200 mm from corners, c.t.c. 450 mm
Screws interconnection frames	Steel screws ø 3 x 70 mm

t 2.4 Other materials

Material description	Dimensions / specifications
Self-adhesive decorative film	3M PVC colorless frosted Dimensions: 420 x 297 mm (w x h)
Glass supporting blocks	Hardwood, 80 x 32 x 5 mm (w x h x t) 80 mm from corners
Intumescent strip	Odice Flexilodice 40 x 2 mm (w x t) Between elements
Mineral wool	Rockwool Sonobase, 120 kg/m³ NW
Isolation blanket	Promat Dalfratherm – 1200 ULS, 91 kg/m³ MW

3 Test data in support of the classification

The classification is based on the reports mentioned in Table t 3.1.
These are the most recent version of the reports, the reports have not been withdrawn and may be used for this classification.

t 3.1 Reports used for the classification

Laboratory	Sponsor	Report reference and date of issue	Used Methods
Peutz bv, NB 2264	AGC Glass Europe nv	Y 3337-3E-RA-001, dated 27 August 2025	EN 1363-1:2020 EN 1363-2:1999+C1 EN 1364-1:2015
Peutz bv, NB 2264	AGC Glass Europe nv	YA 3337-2E-RA-002, dated 15 October 2026	EN 15254-4:2018

3.1 Results

3.1.1 Report Y 3337-3E-RA-001

The construction parameters are described in Chapter 2.2.
The test specimen was heated using the standard heating curve as defined in EN 1363-1.

Tables t 3.2 to t 3.4 shows the elapsed time in whole minutes since the commencement of the test. After 67 minutes the test ended in consultation with the client.

t 3.2 Fire resistance test results glass panes G1 – G6

Assessment criterion with assessment criterion	Elapsed time [minutes]
Integrity (E)	
- No sustained flaming	67
- Cotton pad does not glow or ignite	-
- No gap gauges into the furnace	-
Insulation (I)	
- Increase of average temperature less than 140 °C	67
- Increase of maximum temperature less than 180 °C	67
Radiation (W): heat flux meter 1	Heat flux meter 1
- 5 kW/m^2 not exceeded	Not reached
- Maximum reached [kW/m^2]	0.5

Remark: fail of integrity (E) automatically means fail of insulation (I), see paragraph 5.2.3.2 of EN 13501-2:2023. Fail due to sustained flaming or gap gauges automatically means fail of radiation (W), see paragraph 5.2.4 of EN 13501-2:2023.

t 3.3 Fire resistance test results panel 7

Assessment criterion with assessment criterion	Elapsed time [minutes]
Integrity (E)	
- No sustained flaming	67
- Cotton pad does not glow or ignite	-
- No gap gauges into the furnace	-
Insulation (I)	
- Increase of average temperature less than 140 °C	67
- Increase of maximum temperature less than 180 °C	55
Radiation (W): heat flux meter 2	Heat flux meter 2
- 5 kW/m^2 not exceeded	Not reached
- Maximum reached [kW/m^2]	0.9

Remark: fail of integrity (E) automatically means fail of insulation (I), see paragraph 5.2.3.2 of EN 13501-2:2023. Fail due to sustained flaming or gap gauges automatically means fail of radiation (W), see paragraph 5.2.4 of EN 13501-2:2023.

t 3.4 Fire resistance test results frame

Assessment criterion with assessment criterion	Elapsed time [minutes]
Integrity (E)	
- No sustained flaming	67
- Cotton pad does not glow or ignite	-
- No gap gauges into the furnace	-
Insulation (I)	
- Increase of average temperature less than 140 °C	67
- Increase of maximum temperature less than 180 °C	67
Deflection	
- Less than 100 mm	67

Remark: fail of integrity (E) automatically means fail of insulation (I), see paragraph 5.2.3.2 of EN 13501-2:2023. Fail due to sustained flaming or gap gauges automatically means fail of radiation (W), see paragraph 5.2.4 of EN 13501-2:2023.

3.1.2 Extended Application report YA 3337-2E-RA-002

This report describes the conditions for the extended application of test results for 60 minute end-use applications as provided to Peutz.

The assessment of the extended application report is drafted in accordance with the standards:

- EN 15725:2023 '*Extended application on the fire performance of construction products and building elements: Principle of EXAP standards and EXAP reports*'.
- EN 15254-4:2018: '*Extended application of results from fire resistance tests - non-loadbearing walls - Part 4: Glazed constructions*'.

For assessing the requested extensions to the standard EN 15254-4 the client issued several test reports see Table t 3.5.
The report as described in section 3.1.1 served as primary test evidence.

t 3.5 Reports used for the assessment of the field of extended application

Laboratory	Sponsor	Report reference and date of issue	Used Methods
Peutz bv, NB 2264	AGC Glass Europe nv	Y 3337-3E-RA-001, dated 27 August 2025	EN 1363-1:2020 EN 1363-2:1999+C1 EN 1364-1:2015
WFRGent nv, NB 1173	AGC Glass Europe nv	No. 24410A, dated 17 December 2025	EN 1363-1:2020 EN 1363-2:1999+C1 EN 1364-1:2015
Peutz bv, NB 2264	AGC Glass Europe Sa Seneffe	Y 3665-2E-RA-001, dated 15 june 2026	EN 1363-1:2020 EN 1363-2:1999+C1 EN 1364-1:2015

The requested extension of the field of application concerns:

- Omitting the opaque panel;
- Replacement of the Pyrobel 25 P6B for other Pyrobel 25 glazing;
- Replacement of single glass units for insulating glass units;
- Change the fixing method of the glazing beads;
- Replacement of the opaque panel for another tested panel;
- Alternative connection between the elements
- Replacement of a Glued Laminated Hévéa rubberwood for another type of wood;
- Changing shapes of the glass.

The extended field of application and the conditions under which it is valid is included in Chapter 5 of the present classification report.

4 Classification

4.1 Reference of the classification

This classification is performed in accordance with paragraph 7.5.2 of EN 13501-2.

4.2 Classification

The system, a non-loadbearing (glazed) partition wall, is classified according to the following combinations of performance criteria and classes.

Pyrobel 25 (P6B) and Opaque panels type P1 or P2 with intumescent material in a Glued Laminated Timber (GLT) Hévéa rubberwood frame, and a decorative film on the glass:

Classification of the fire resistance
EI 60

For Pyrobel 25 P6B and a Opaque Promatect H panel 30 or 40 mm without intumescent material in a Glued Laminated Timber (GLT) Hévéa rubberwood frame, and a decorative film on the glass the classification is limited to a classification up to and including EI 45.

The classification is valid for the field of application as described in Chapter 5.

5 Field of application

5.1 General

The classification is valid for structures that are identical in detail to the structure described in the test report. In addition, within the direct and extended field of application as defined in the test standard and the applicable standard for the extension of the field of application, see Table t 3.1, one or more of the modifications of the tested structure indicated below are permitted, provided that at least the same stiffness and stability is achieved for the structure as for the tested structure.

The extensions on the field of application refer to the behaviour of a product, product family or building element under specific test conditions. They are not the only criteria on which the potential fire risk of the product or product family in its application should be considered.

The direct field of application is taken from Annex A, Chapter A.4 of EN 1364-1. The extensions to the field of application requested by the client are based on EN 15254-4. The field of application as defined in the present classification report comprises the direct field of application including the requested extended field of application.

5.2 Field of application and conditions

The field of application without overrun time is valid as described in section 5.4 up to and including the classifications: **EI 60**.

The field of application is valid with overrun time, as described in section 5.5 up to and including the classifications: **EI 60**.

The realized overrun time relative to the classification time is B ≥6 minutes

In the sections below, the relevant section from the test standard (EN 1364-1) is always cited and where applicable supplemented by the relevant clauses from EN 15254-4 and includes both the direct and extended scope.

5.3 Asymmetrical design

The glazing Pyrobel 25 P6B has an asymmetrical design, but was tested with fire exposure from both sides, demonstrated in the reports in Table t 3.5. The frame is symmetrical. Therefore, the classification is valid for fire exposure from both sides.

5.4 Field of application without overrun time

5.4.1 Glazed elements (Glass including the Frame)

EN 1364-1, A.4.2.1.1 Installation angle

Test results on vertical glazed elements cover glazed elements sloped to a maximum angle of ± 10° from the vertical plane, provided the height of the glazed element is not larger than the maximum height tested: 2760 mm.

5.4.2 Non-glazed element

EN 15254-4, 4.2.3, 5.6, 6.1, 7.1 opaque panel

The classification EI 60 is valid without an opaque panel:

- Frames may be manufactured using some or all the junction types. This may result in constructing a partition omitting (glazed) panels and decrease the glazed area. Therefore, it is possible to construct a partition without the opaque panel.
- It is allowed to increase the glazed area within the fire-resistant glazed element by replacing opaque sections or panels with glass. In these cases, the increase in radiation from the extended fire-resistant glazed element shall be re-calculated and evaluated against the radiation criteria given in Annex B of EN 15254-4. The glazed area fulfils the criteria for the performance insulation (I) and fulfils the radiation criteria; thus, the calculation is not necessary. No extension of glass dimensions to those defined by Table t 5.1 are allowed.

The classification EI 60 is valid with an opaque panel under the following conditions:

- Around the perimeter of the panel: application of Flamiseal-G (Etancheite Jung) 34 x 2 mm (w x t);
- Allowed Panel type P1: Promat Promatect H, minimal thickness: 2 x 20 mm, glued with K 84 one-component silicate glue.
- Allowed panel type P2: steel-gypsum-steel, minimal thickness: 1.5 mm Sendzimir glavanized steel sheet, 3 times 12.5 mm Knauf DF gypsum boards 1.5 mm Sendzimir glavanized steel sheet, glued with K 84 one-component silicate glue Edges taped with aluminium tape.
- For the maximal allowed dimensions see section 5.5.3.

5.4.3 Self adhesive decorative film

EN 15254-4, 4.2.3

Adding self-adhesive decorative film to the glass is allowed if it is a 3M PVC film 80 µm thick on the exposed and unexposed side based on the primary and additional test evidence.

5.4.4 Exchange of the fire-resistant glass

EN 15254-4, 5.1 and 5.1.2 exchange of the fire-resistant glass

Replacement of the fire-resistant glass Pyrobel 25 P6B for other Pyrobel glazing is allowed, under the following conditions:

- Both Pyrobel 25 P6B and the alternative Pyrobel are fire resistant glass products within the same glass product range.
- The replacing fire resistant glass has at least the same resistance to fire classification in accordance with EN 13501-2 as the tested glass.
- The dimensions (width × height) of the replacing glass are within the maximum dimensions defined in Table t 5.1.
- The overall glass thickness may be increased provided that no fire protection interlayer and no individual glass component will be decreased.
- The thickness of individual non-fire protection components (in this case polyvinyl butyral PVB) shall not be increased. It may be decreased which results in a decrease of the overall glass thickness.

Without further test evidence replacement of the fire-resistant glass Pyrobel 25 P6B to other members of the product family Pyrobel 25 is allowed under the following conditions:

- The test results on the single glass are equally applicable to IGU (DGU or TGU)[1] with a monolithic or laminated counter pane, coated or non coated
- The overall glass thickness may also be increased by adding non-fire resistant glass panes to the tested glass using non-fire protection interlayers with a thickness < 1mm.
- The non-fire protection components (PVB) are allowed on either the exposed and unexposed side, based on the additional test evidence.

5.4.5 Glass shapes

EN 15254-4, 5.2 Glass shapes

Circular, triangular or 4 sided non-rectangular shapes may be cut from within the extended rectangular pane size defined by the field of direct application. All other non-rectangular shapes may only be cut from the tested rectangular pane size and shall not be extended further.

[1] IGU = Insulating Glass Unit, DGU = Double Glass Unit, TGU = Triple Glass Unit

5.4.6 **Glazing system (see figure 16 of EN 1364-1)**

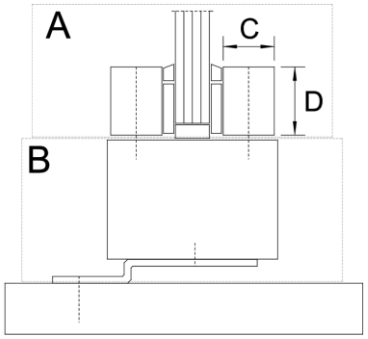

f 5.1 Figure 16 from EN 1364-1, glazing system and framing system
A: glazing system
B: framing system
C: depth of the glazing bead
D: height of the glazing bead

EN 1364-1, A.4.2.2.1 linear dimensions

The linear dimensions of panes may be decreased from the dimensions tested. Height and width may be considered independently.

EN 1364-1, A.4.2.2.3 Glazing beads and EN 15254-4 exchange of timber glazing beads

The test results cover:
- screw fixing of at least the length 60 mm, applied with the same or smaller centre to centre distance: 200 mm.
- nail fixing of at least the length 57 mm, applied with the same or smaller centre to centre distance: 100 mm.

Test results for applications intended for EI classification on sloped or chamfered bead profiles also cover a flat bead of the same height (D in Figure 16 of EN 1364-1), but not vice versa, and also cover a bead depth that is at least the same as tested (C in Figure 16 of EN 1364-1).

Dimensions of tested glazing beads: d x h: 30 x 27 mm, lowest side: 20 mm.

Replacement of Glued Laminated Hévéa rubberwood beads for another type of wood is allowed based on the following conditions:
- Glued laminated timber may be replaced by solid timber.
- Timber to be exchanged shall have the same or higher density as tested (> 540 kg/m^3 Nominal Weight of Hévéa rubberwood).
- Hévéa rubberwood is a hard wood and shall not be exchanged with soft wood.

The beads were tested unprotected, the results apply equally to protected beads. Protection means any measure e.g. impregnation, varnish, coating of paint, intended to improve the reaction to fire classification according to EN 13501-1 or the K-classification according to EN 13501-2 of the timber.

5.4.7 **Bead surface coverings.**

EN 15254-4, 5.7 – bead surface coverings

Decorative surface coverings of the glazing beads may be added, provided it is demonstrated that the covering material achieves at least Class A2 when tested according to EN 13501-1.
In addition, it shall be shown that they do not adversely affect the fire resistance performance of the fire-resistant glazed element, e.g. in the case of replacement coverings that provide a contribution to insulation.

Any coverings on glazed elements classified EI shall be secured using only fixing method(s) proven in the reference test and/or by pre-existing test data see 5.4.6.

5.4.8 **Framing system (see figure 16 of EN 1364-1)**

EN 1364-1, A.4.2.3

The distance between mullions and/or transoms may be decreased from that tested: 1576 mm.

Maximal allowed centre to centre distance between fixing centres is 450 mm.

The cross-sectional dimensions of the frame profiles may be increased from the tested dimensions: d x h: 102.5 x 33 mm for the perimeter frame and coupled mullion and 102.5 x 46 mm for mullions and transoms.

EN 15254-4, 4.2.3 and 6.1.1 - changes to the framing system

The connection between two elements with a double mullion using two connected frame members of 102.5 × 33 mm (d × h) each is allowed if:

- the two mullions are connected with screws and in each groove in the mullions of 40 x 5 mm (w x d) intumescent 40 x 2 mm (w x th) is glued.
- the two mullions are connected with screws and in each groove in the mullions of 71 x 7,5 mm (w x d) a Hévéa rubberwood lath 70 x 15 mm (w x th) is placed.

EN 15254-4, 4.2.3 and 6.1.2 - changes to the framing system

replacement of Glued Laminated Hévéa rubberwood for another type of wood, is allowed based on the following conditions:

- Glued laminated timber may be replaced by solid timber:
- Timber to be exchanged shall have the same or higher density as tested. Timber to be exchanged shall have the same or higher density as tested (> 422 kg/m^3 Measured Weight of the frame in the primary test evidence), Beech is allowed.
- Hévéa rubberwood is a hard wood and shall not be exchanged with soft wood.

The frame members were tested unprotected, the results apply equally to protected frame members. Protection means any measure e.g. impregnation, varnish, coating of paint, intended to improve the reaction to fire classification according to EN 13501-1 or the K-classification according to EN 13501-2 of the timber.

5.4.9 Frame surface coverings

EN 15254-4, 6.2 – Frame surface coverings

Decorative surface coverings of the framing members may be added, provided it is demonstrated that the covering material achieves at least Class A2 when classified according to EN 13501-1. If the surface covering is not Class A2 then the rules laid down in the EN 15269-3 apply.

5.4.10 Supporting constructions

EN 1364-1, A.4.2.4.2 Standard supporting constructions

The test specimen is tested in a flexible standard supporting construction and may be applied to high density rigid supporting constructions (in accordance with EN 1363-1) with at least the same fire resistance classification and an overall thickness equal or greater than that of the element used in the tests.

Test results obtained with flexible standard supporting constructions do not cover sandwich panel constructions and flexible supporting constructions where the lining does not cover the studs on both sides.

Test results obtained with flexible standard supporting constructions cover alternative flexible supporting constructions of the same fire resistance provided that:

- the construction is of a stud and board type construction, classified in accordance with EN 13501-2, and
- the construction has an overall thickness not less than the minimum thickness of the appropriate range given in EN 1363-1 for the standard flexible wall used in the test, and
- the number of board layers and the overall board layer thickness is equal or greater than that tested, and

- flexible wall constructions with timber studs are constructed with at least the same number of layers given in EN 1363-1 on the faces and at the interface between the glazed element and the supporting construction.

The test specimen was tested with a flexible standard supporting construction fixed along the vertical and/or horizontal edges, the permitted flexible supporting constructions can only be interfaced along its tested edge-type (vertical and/or horizontal). Flexible supporting constructions below the element shall be reinforced by timber members into the C-profiles at the bottom of the aperture: RND (Red Norwegian Pine 45 x 45 mm, 535 kg/m³, 13%).

The permitted rigid supporting constructions can be interfaced with all edge-types of the glazed element.

5.5 Field of application requiring overrun time

5.5.1 Dimensions of the glazed element

EN 1364-1, A.4.3.2.1 Height

An overrun time B is achieved. The test result of the glazed element covers the height up to a maximum of the tested height multiplied by a factor of 1.2. This is irrespective of the measured deflections.

EN 1364-1, A.4.3.2.2 Width

Test results cover rectangular glazed elements of greater width by replication of the tested glazed element or parts thereof, provided:

- the framing system is identical to the one tested, and
- the width of the specimen in the test was 2.8 m or greater with one vertical edge unrestrained, and
- the mullions within and/or connection joints between glazed elements have been tested.

5.5.2 Dimensions and area of individual rectangular glass panes

EN 1364-1, A.4.3.3 maximal width and height

Overrun time B is achieved. The test result of a pane covers dimensions up to a maximum of the tested dimensions multiplied by a factor 1.2 in width and/or height, provided the maximum tested area multiplied by a factor 1.21 is not exceeded.

To accommodate the increase in glass dimensions, it is permitted to increase the distance between mullions and/or transoms.

Only portrait-oriented panes were tested; therefore the aspect ratio is not calculated.

t 5.1 Allowed maximal sizes of individual panes, with overrun time

Pane dimension[1]	Largest tested pane portrait	Allowed maximal dimensions
Width[2] [mm]	1500	1800
Height[2] [mm]	2684	3221
Area [m^2]	4.0	4.9

[1] When applying the maximum tested width and height, the allowed maximum area shall not be exceeded.
[2] The allowed dimensions might exceed production limits.

5.5.3 Dimensions and area of individual rectangular opaque panels

EN 1364-1, A.4.3.3 maximal width and height and EN 15254-4, 4.2.3

Maximal allowed panel dimensions when mounted with intumescent as described in section 5.4.2:

- Panel type P1: minimal 2 x 20 mm Promatect H (overrun time A):
  tested: 1468 x 1245 mm, 1.8 m^2
  allowed: 1615 x 1370 mm, 2.0 m^2
- Panel type P2: minimal 1.5 Sendzimir steel – 3 x 12.5 Knauf gypsum board – 1.5 Sendzimir steel) (overrun time B):
  tested: 1468 x 1245 mm, 1.8 m^2
  allowed: 1762 x 11494 mm, 2.2 m^2

6 Additional Statement

This document does not represent type approval or certification of this product.

In the event of conflicting provisions in the harmonised standards and technical specifications, the provisions of Regulation (EU) 305/2011, better known as the Construction Products Regulation (CPR), prevail.

J. van der Vleuten, MSc.
Deputy Head of Laboratory for Fire Safety

D.J. den Boer, BSc.
Management

This report contains 21 pages and 1 appendix:

Appendix 1: Drawings (13 pages)

PEUTZ

YB 3337-1E-RA-002 1.1

Appendix 1 Drawings

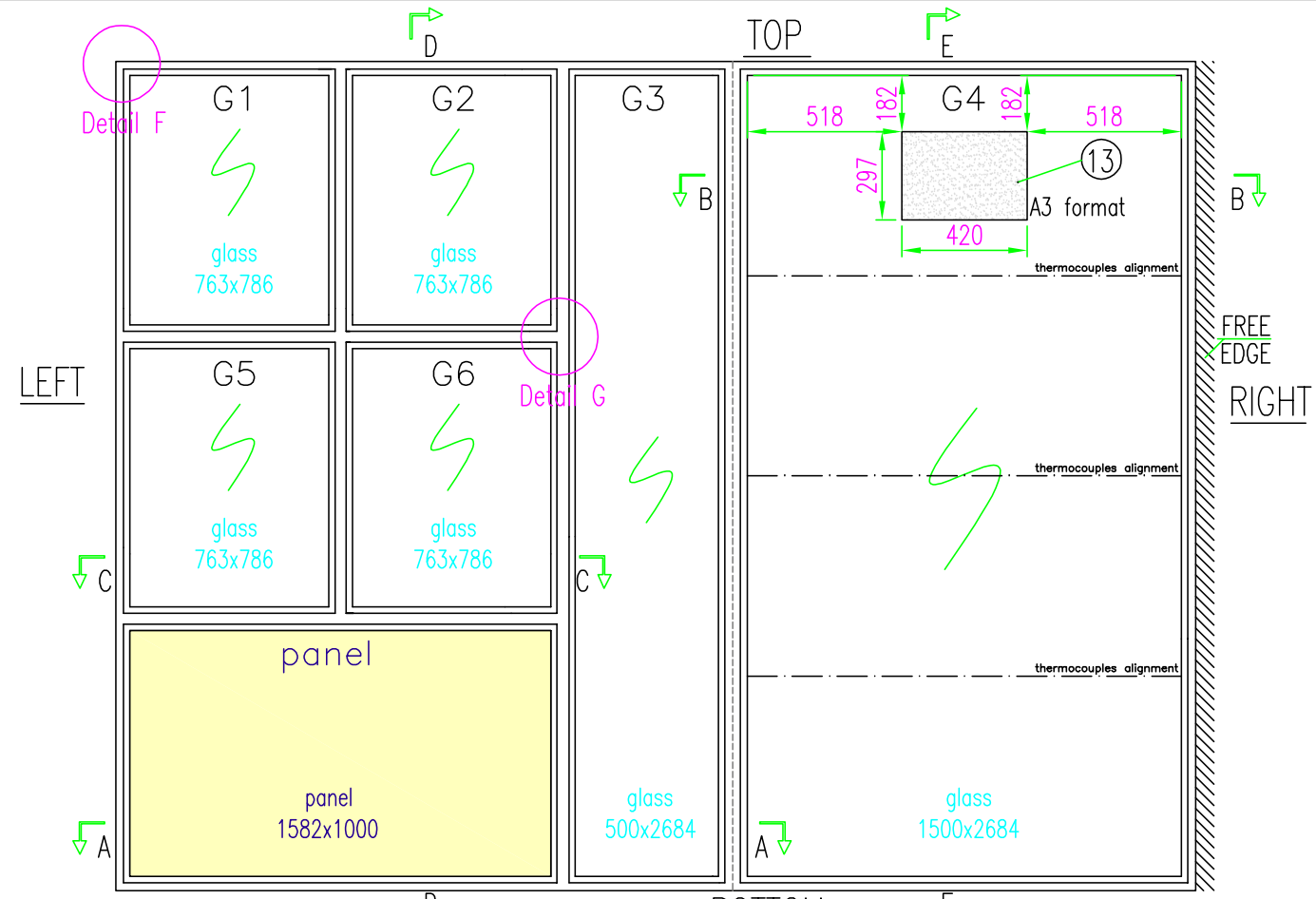

Peutz NL	REF. TEST : Y 3337-1E-0F	TARGET : EI60	GLASS STRUCTURE : 3/3/8/3/3:::3
FIRE SIDE : fire on Pyrobel 25	GLAZING BEADS : symmetrical	NOMINAL THICKNESS : 32.6 +/- 2.0 mm	
furnace = 4.05(w)x3.0(h)m	opening = 3.85(w)x2.8(h)x0.12(d)[gypsum]/0.2(d)[concrete]m		
AGC	ELEMENT : Pyrobel 25 P6B in rubberwood (hévéa) frame		DATE : 22/01/25
	DETAIL : TEST ELEMENT – ON THE PROTECTED SIDE		DRAWING N° : DL 1129

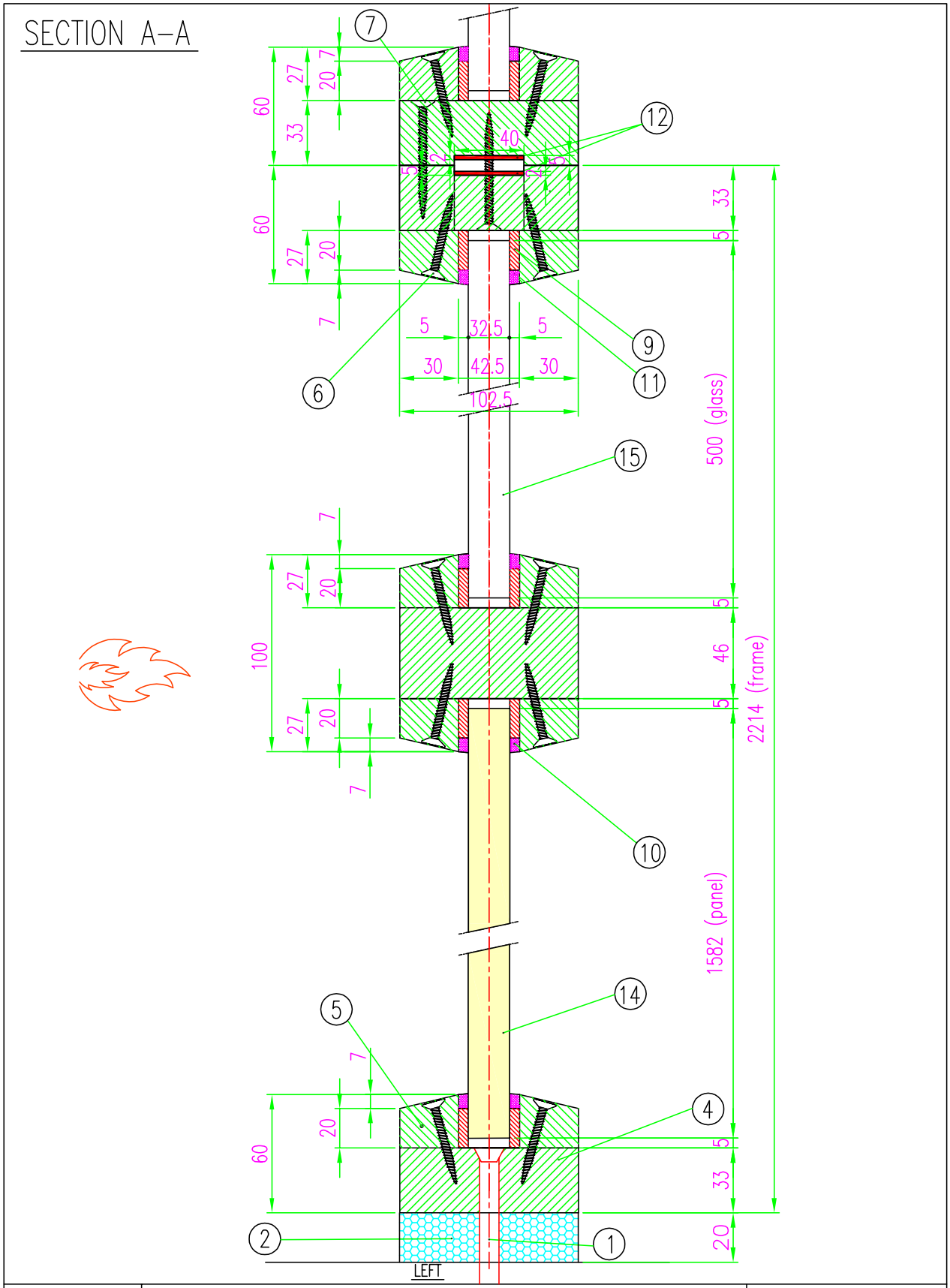

AGC	ELEMENT : Pyrobel 25 P6B in rubberwood (hévéa) frame	DATE : 22/01/25
	DETAIL : SECTION A–A	DRAWING N° : DL 1129

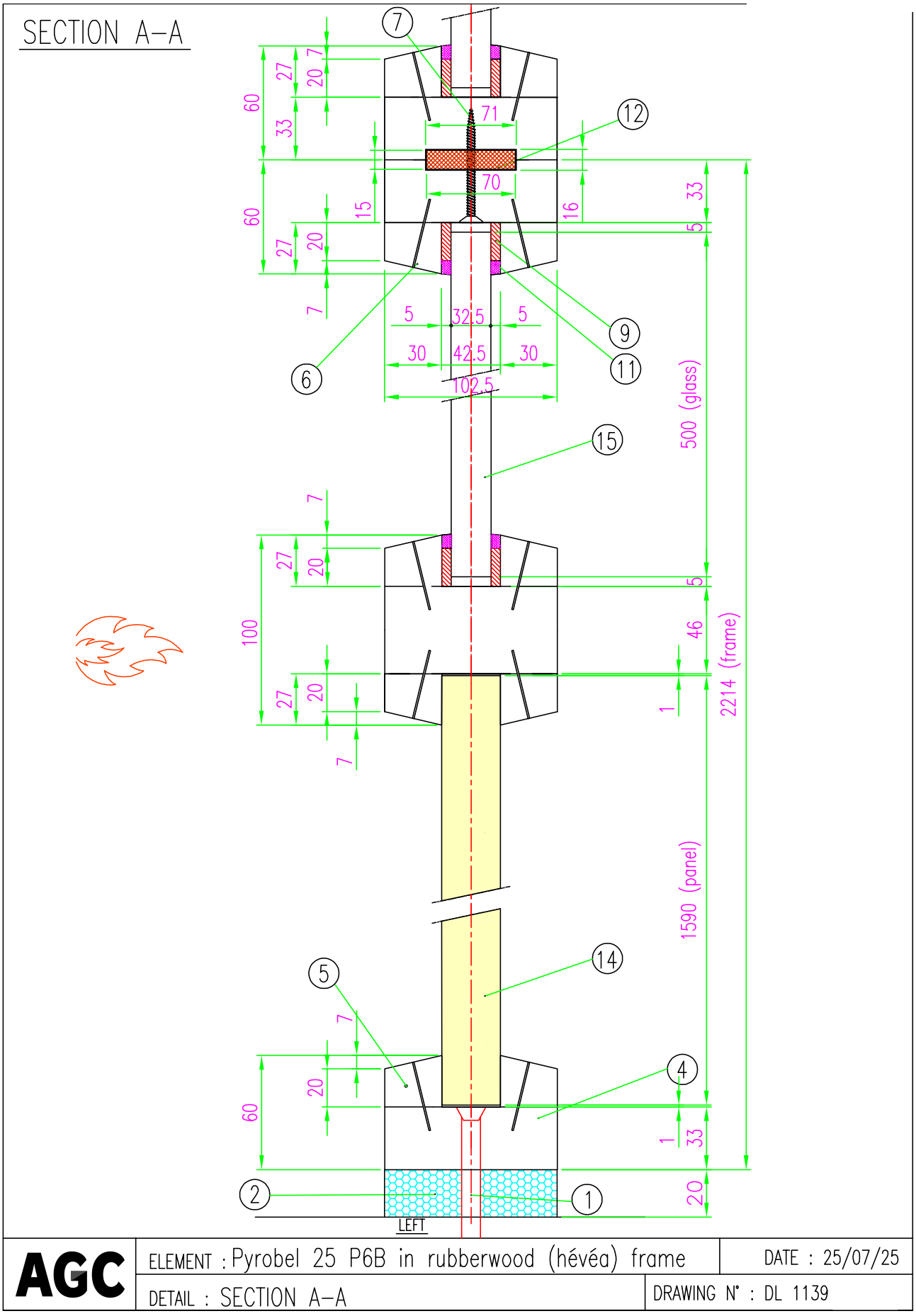
SECTION A–A
7
12
71
70
6
9
11
15
14
5
4
2
1
LEFT
60
27
20
7
33
15
16
5
32.5
30
42.5
102.5
500 (glass)
100
46
1
2214 (frame)
1590 (panel)
AGC
ELEMENT : Pyrobel 25 P6B in rubberwood (hévéa) frame
DATE : 25/07/25
DETAIL : SECTION A–A
DRAWING N° : DL 1139

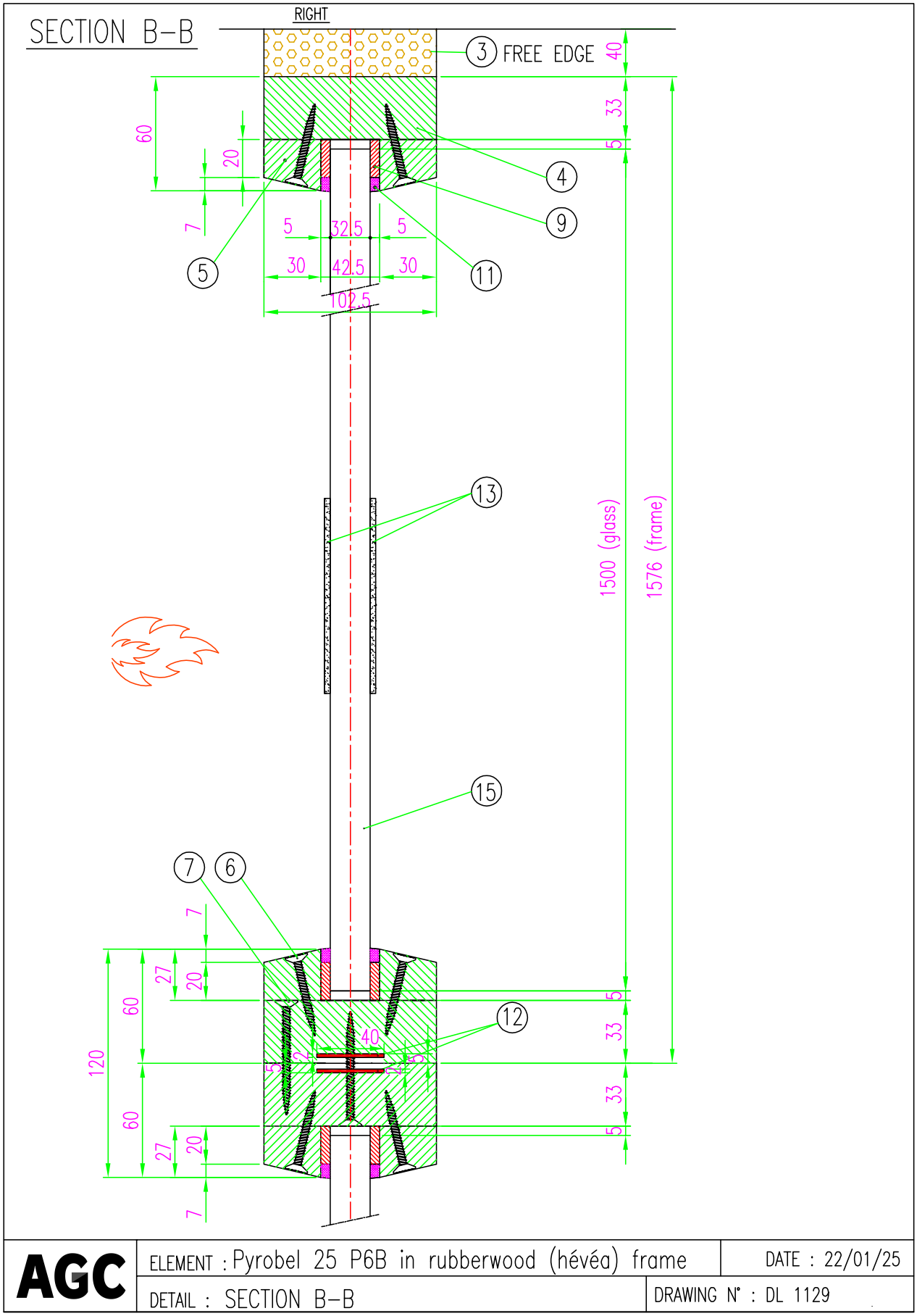

AGC	ELEMENT : Pyrobel 25 P6B in rubberwood (hévéa) frame	DATE : 22/01/25
	DETAIL : SECTION B-B	DRAWING N° : DL 1129

SECTION C–C

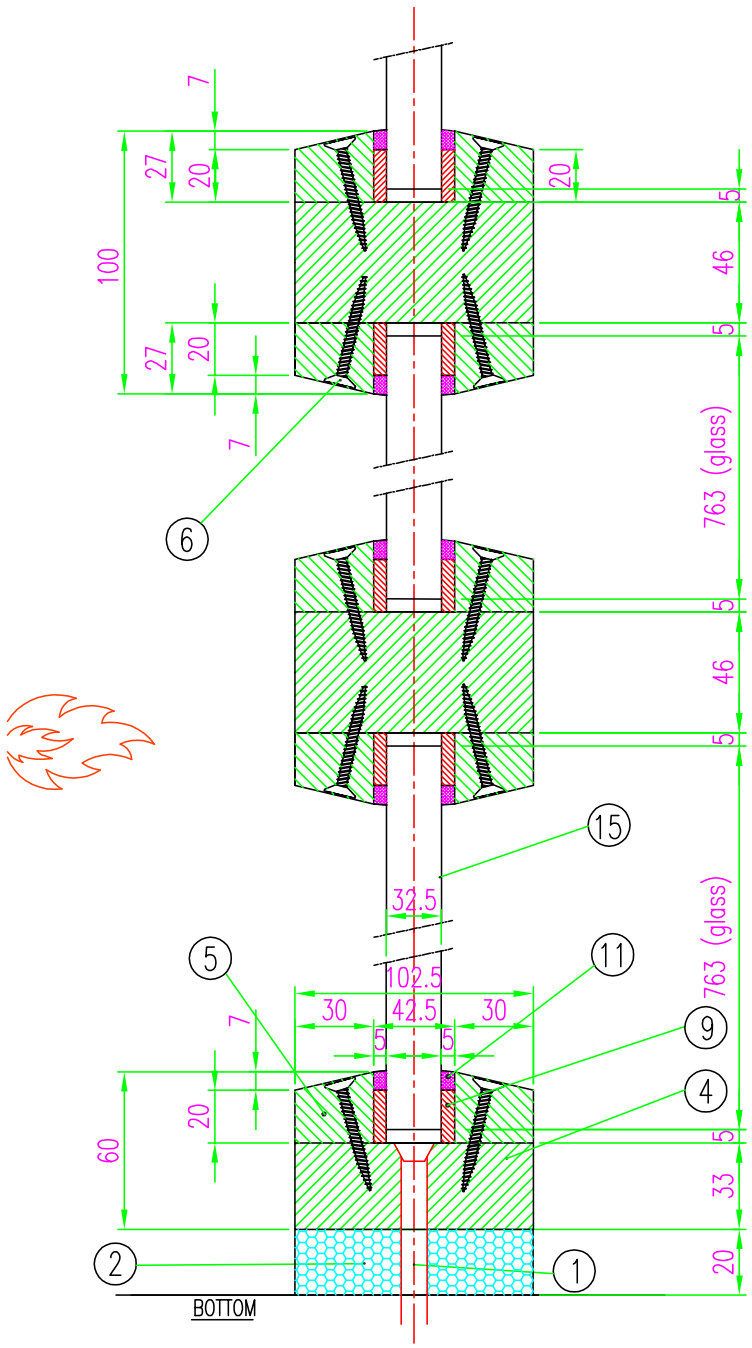

AGC	ELEMENT : Pyrobel 25 P6B in rubberwood (hévéa) frame	DATE : 22/01/25
	DETAIL : SECTION C–C	DRAWING N° : DL 1129

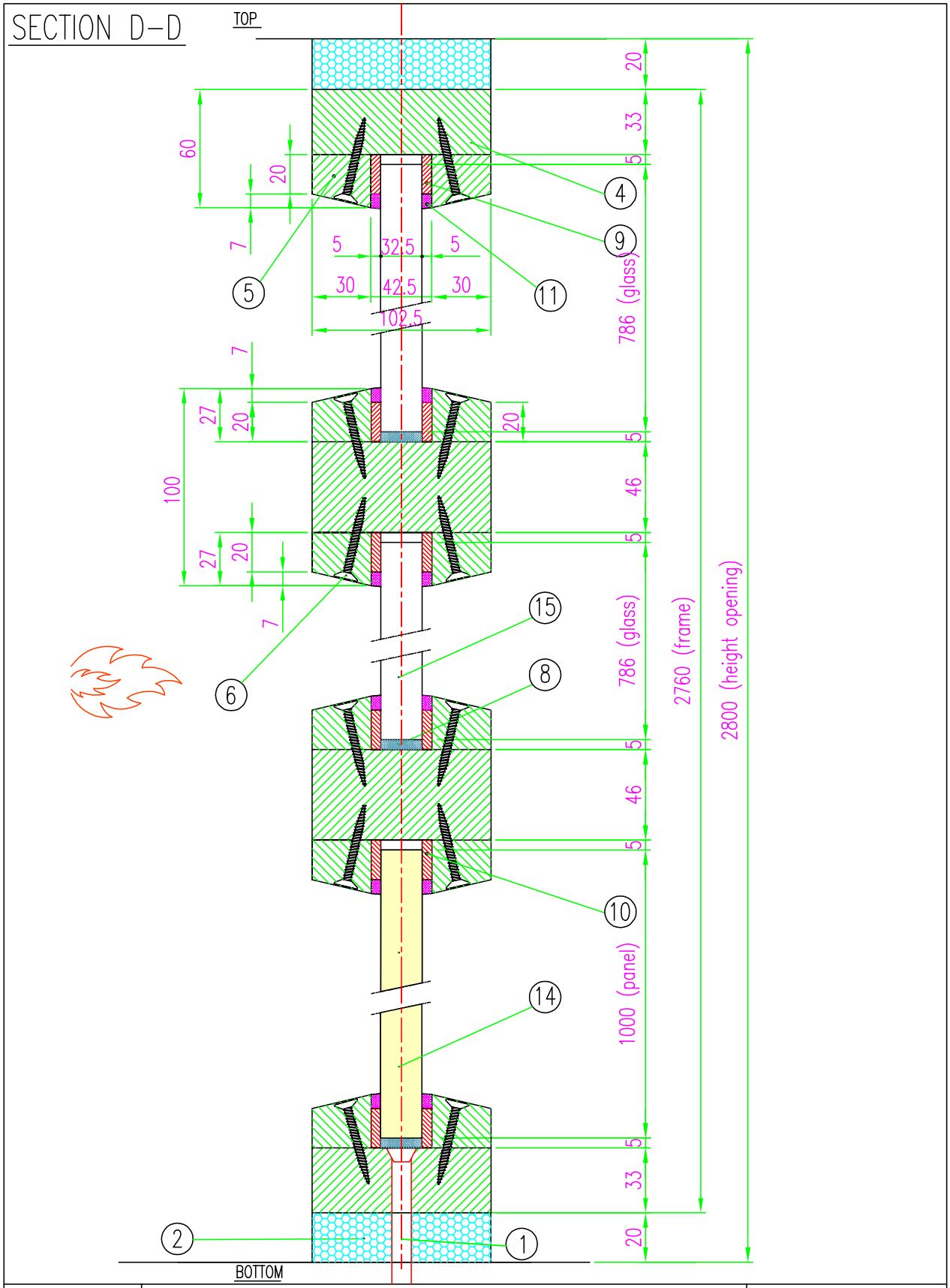

AGC	ELEMENT : Pyrobel 25 P6B in rubberwood (hévéa) frame	DATE : 22/01/25
	DETAIL : SECTION D–D	DRAWING N° : DL 1129

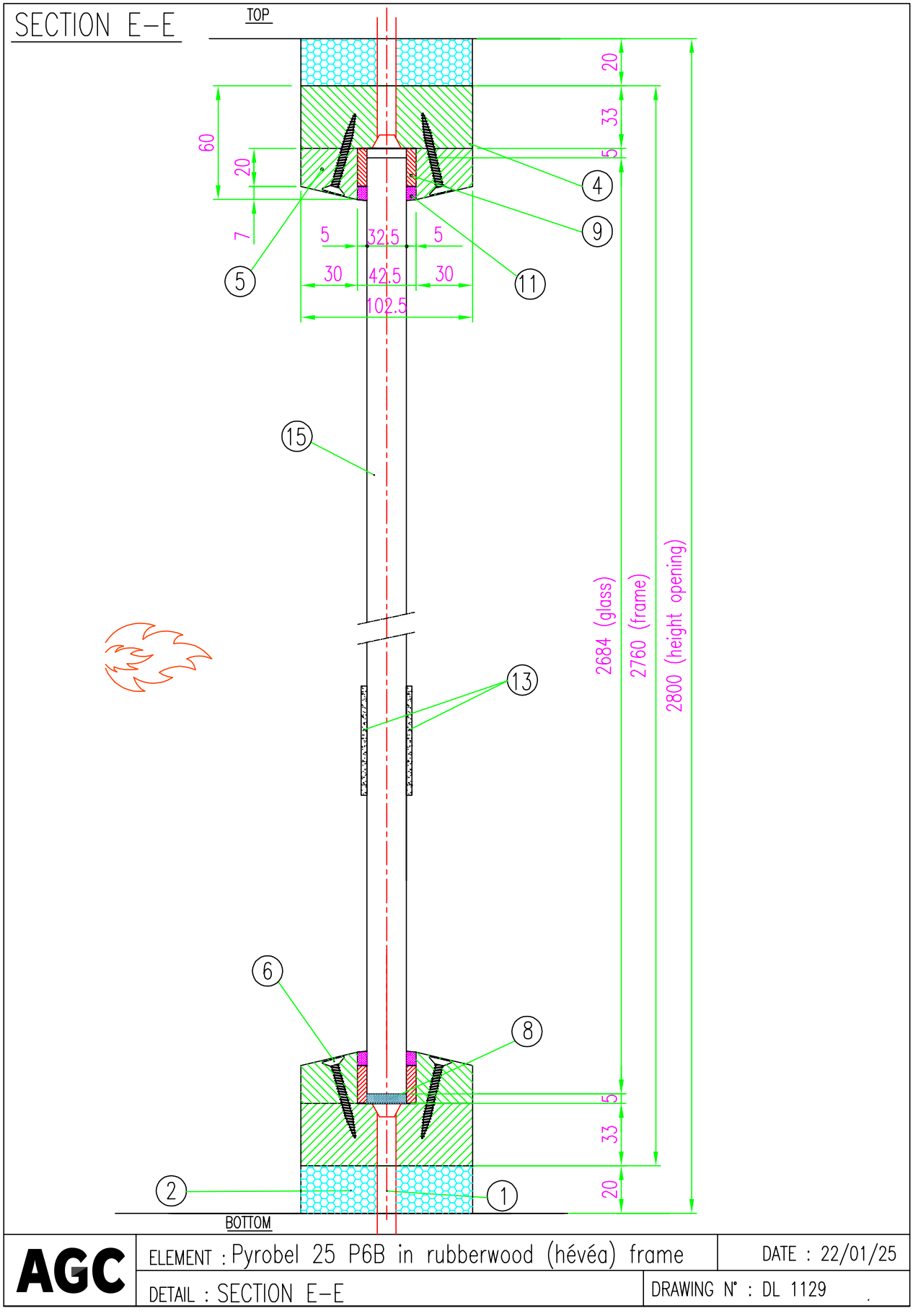
SECTION E-E
TOP
BOTTOM
20
33
5
60
20
7
5
32.5
5
30
42.5
30
102.5
4
9
5
11
15
13
6
8
2
1
2684 (glass)
2760 (frame)
2800 (height opening)
AGC
ELEMENT : Pyrobel 25 P6B in rubberwood (hévéa) frame
DATE : 22/01/25
DETAIL : SECTION E-E
DRAWING N° : DL 1129

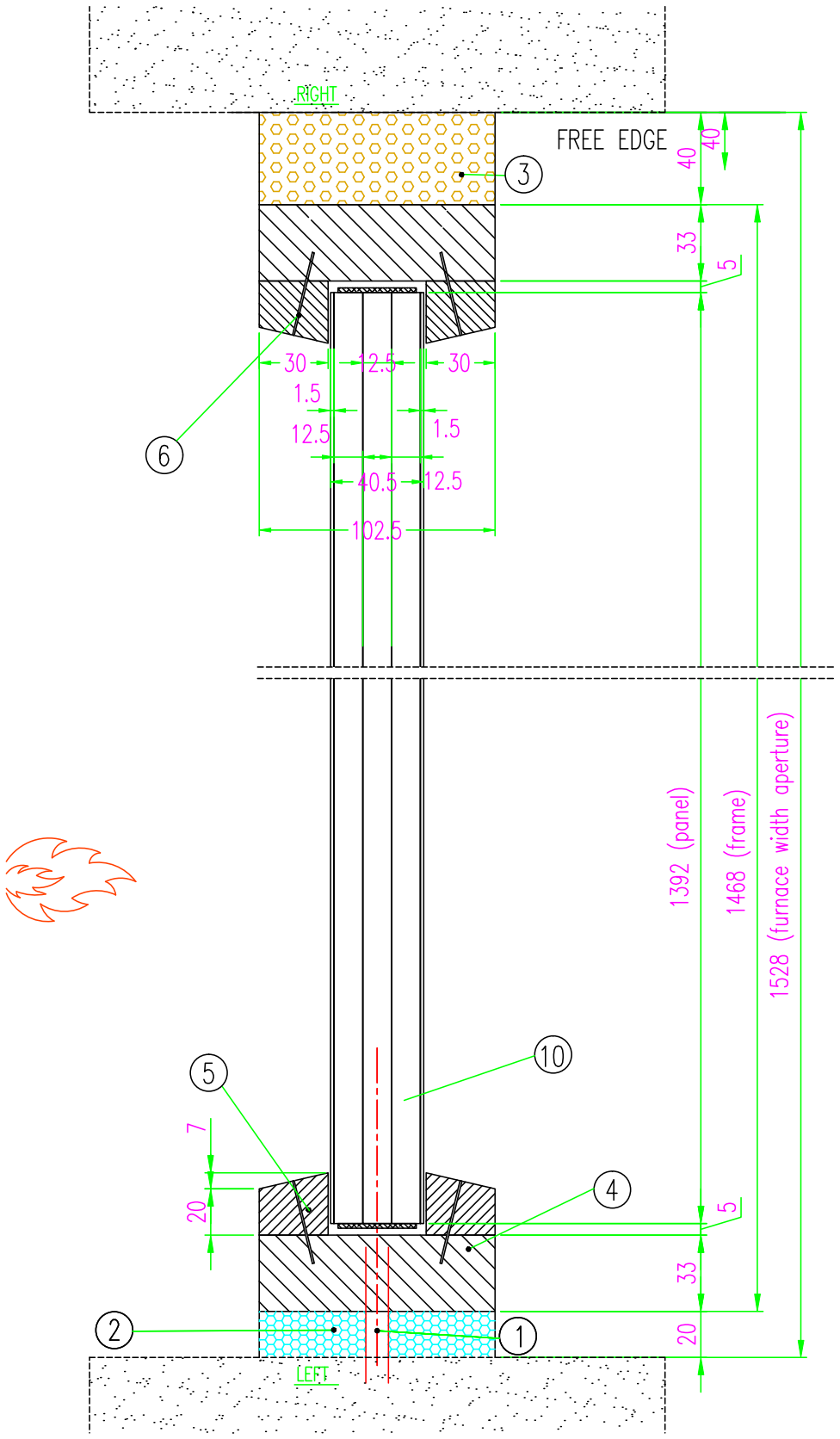

AGC	ELEMENT : Panel in a slim timber frame	DATE : 02/06/26
	DETAIL : SECTION A–A	PLAN N° : DL 1147

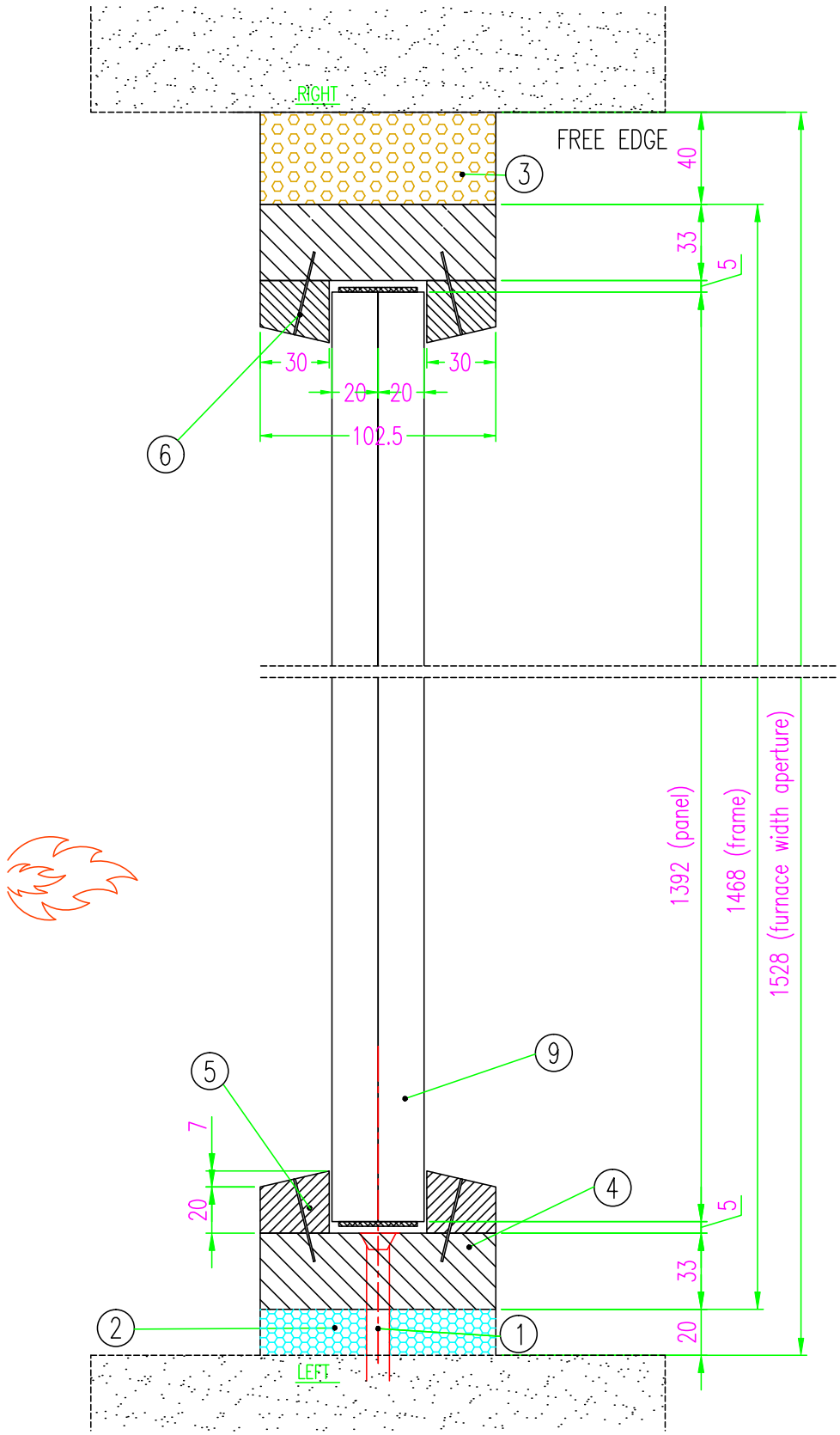

AGC	ELEMENT : Panel in a slim timber frame	DATE : 02/06/26
	DETAIL : SECTION B–B	PLAN N° : DL 1147

Detail F

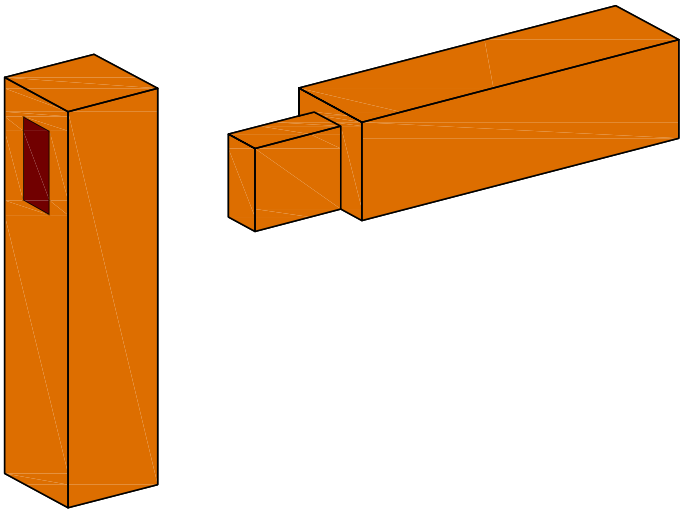

Detail G

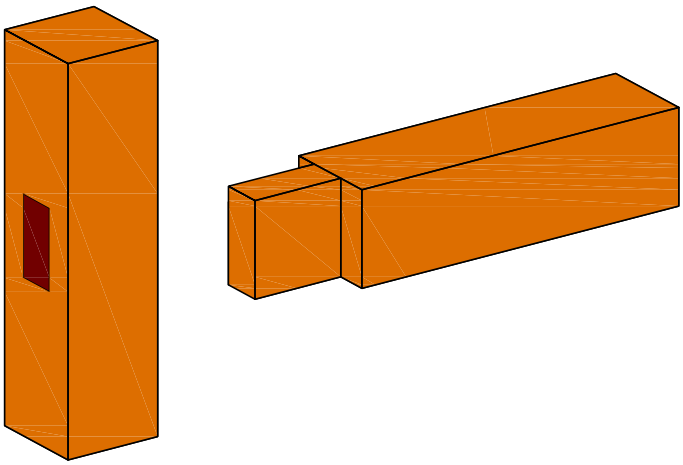

Mortising tenon assembly

AGC	ELEMENT : Pyrobel 25 P6B in rubberwood (hévéa) frame	DATE : 22/01/25
	DETAIL : Details F & G	DRAWING N° : DL 1129

ITEM	COMPONENT
1	Hilti 100 HT anchor – Ø6xL112 mm – fixing frame (concrete)
	Hilti HRD-C plastic anchor – Ø7xL100 mm – fixing frame (gypsum)
	200 mm from corners and c.t.c. 450 to 500 mm maxi
2	Thermal Insulation – Promat Dalfratherm-1200 ULS – 96 kg/m3
3	Thermal Insulation – Mineral wool – 120 kg/m3
4	Glued Laminated Timber Rubberwood frame – hévéa (see sample delivered for density value)
5	Glued Lamintaed Timber Rubberwood bead – hévéa (see sample delivered for density value)
6	Steel screw – Ø4.5x60 mm – fixing for beads
	60 mm from corners and c.t.c. 200 to 250 mm maxi
7	Steel screw – Ø3x70 mm – Fixing for modules
8	Glazing setting block – hardwood – 80x32x5 mm
	2 per glass pane – at 80 mm from corners
9	Ceramic paper – Superwool X607 – 20x5 mm
10	Ceramic paper – Superwool X607 – 20x6 mm
11	Neutral Sealant – Dow – Dowsil Firestop 700 – grey
12	Intumescent strip – Odice – Flexilodice – 40x2 mm
13	PVC colorless frosted self-adhesive decorative film
	3M – reference 5525 – 80 µm – B-s1-d0
14	Panel – Promat – Promatect-H – 30 mm (2x15 mm)
15	Pyrobel 25 P6B

AGC	ELEMENT : Pyrobel 25 P6B in rubberwood (hévéa) frame	DATE : 22/01/25
	DETAIL : COMPONENTS LIST	DRAWING N° : DL 1129 1

ITEM	COMPONENT
1	Hilti 100 HT anchor – Ø10xL112 mm – fixing frame (concrete)
	Hilti HRD-C plastic anchor – Ø8xL100 mm – fixing frame (gypsum)
	200 mm from corners and c.t.c. 450 to 500 mm maxi
2	Thermal Insulation – Promat Dalfratherm-1200 ULS – 96 kg/m3
3	Thermal Insulation – Mineral wool – 120 kg/m3
4	Glued Laminated Timber Rubberwood frame – hévéa (see sample delivered for density value)
5	Glued Lamintaed Timber Rubberwood bead – hévéa (see sample delivered for density value)
6	Galvanized nails – Ø1.5x45 mm – fixing for beads
	50 mm from corners and c.t.c. 100 mm maxi
7	Steel screw – Ø5x60 mm – Fixing for modules
8	Glazing setting block – hardwood – 80x32x5 mm
	2 per glass pane – at 80 mm from corners
9	Ceramic paper – Superwool X607 – 20x5 mm
10	RND 36 x 46 mm
11	Neutral Sealant – Dow – Dowsil Firestop 700 – grey
12	Hardwood lath – 70 x 15
13	PVC colorless frosted self-adhesive decorative film
	3M – reference 5525 – 80 µm – B-s1-d0
14	Panel – Promat – Promatect-H – 40 mm (2x20 mm) + K84 Glue
15	Pyrobel 25 P6B
16	CW Profil
17	UA Profil

AGC	ELEMENT : Pyrobel 25 P6B in rubberwood (hévéa) frame	DATE : 23/07/25
	DETAIL : COMPONENTS LIST	DRAWING N° : DL 11239

ITEM	COMPONENT
1	Hilti 100 HT anchor – Ø10xL112 mm – fixing frame (concrete)
	Hilti HRD-C plastic anchor – Ø8xL100 mm – fixing frame (gypsum)
	200 mm from corners and c.t.c. 450 to 500 mm maxi
2	Thermal Insulation – Promat Dalfratherm-1200 ULS – 96 kg/m3
3	Thermal Insulation – Mineral wool – 120 kg/m3
4	Glued Laminated Timber Rubberwood frame – hévéa (see sample delivered for density value)
5	Glued Lamintaed Timber Rubberwood bead – hévéa (see sample delivered for density value)
6	Galvanized nails – Ø1.37x45 mm – fixing for beads
	50 mm from corners and c.t.c. 100 mm maxi
7	Glazing setting block – hardwood – 80x32x5 mm
	Panel P1 – setting blocks 1mm thickness
	Panel P2 – setting blocks 3mm thickness
	2 per glass pane – at 80 mm from corners
8	Intumescent strip – G 34mm x2mm
9	Panel P2 – Promat – Promatect-H – 40 mm (2x20 mm)
	+ K84 Glue
10	Panel P1 – Knauf DF gypsum – 1.5mm Sendzimir galvanised steel
	+ 3x12.5mm gypsum + 1.5mm Sendzimir galvanised steel
	+ K84 Glue

AGC	ELEMENT : Panel in a slim timber frame	DATE : 02/06/26
	DETAIL : COMPONENTS LIST	PLAN N° : DL 1147